Canadian Grain Commission | Commission canadienne des grains

Sampling Systems Handbook and Approval Guide

Canadian Grain Commission Industry Services ISO 9001:2008

Revised: **February 22, 2023**

In effect: **August 1, 2015**

Canada

Table of contents ..... Error! Bookmark not defined.

Chapter 1 ..... **4**

General information 4

1.1 Purpose 4
1.2 Authority 4
1.3 Responsibilities 5
1.4 Glossary of terms 6

Chapter 2 ..... **8**

Automatic sampling systems for licensed grain handling facilities 8

2.1 Overview 8
2.2 Equipment requirements 8
2.2.1 Intended use 11
2.2.2 Marking 11
2.2.3 Repeatability 11
2.2.4 Speed of traverse 12
2.2.5 Power, air, and hydraulic sources 12
2.2.6 Controls 12
2.2.7 Enclosure and access 12
2.2.8 Sample collector openings 13
2.2.9 Surplus sample return 13
2.2.10 Sample delivery lines 13
2.2.11 Sample delivery system access 14
2.2.12 Clearing between lots 14
2.2.13 Location and installation 14
2.2.14 Segregation of samples 15
2.2.15 Divider installation 16
2.2.16 Timer installation and use 18
2.2.17 Blending limitations 19
2.2.18 Integrity of grain lots 19
2.3 Verification and approval process 20
2.4 Sampling system security 21
2.5 Maintenance 21
2.6 Monitoring and oversight protocols 22

Chapter 3 ..... **25**

Conditionally approved automatic sampling systems for specific Canadian Grain Commission programs 25

3.1 Overview 25
3.2 Equipment 25

Chapter 4 ..... **28**

Manual sampling 28

4.1 Manual stream sampling 28
4.1.1 Determining sampling frequency when stream sampling 28
4.2 Manual sampling of static (non-flowing) lots 30

4.2.1 Approved triers by crop type for grain 31
4.2.2 Requirements for sampling sacked grain 32
4.2.3 Procedure for sampling horizontally with a double sleeve trier 33
4.2.4 Procedure for sampling vertically with a double sleeve trier 33
4.2.5 Procedure for sampling with a Nobbe trier 33
4.2.6 Determining sampling intensity of grain stored in bags 34
4.2.7 Sampling intensities of grain stored in totes 34

Chapter 5 36

Canadian Grain Commission-approved sample dividing equipment 36

Chapter 6 37

Contact information 37

Chapter 1

General information

1.1 Purpose

The Sampling Systems Handbook and Approval Guide (Sampling Handbook) outlines the policies and procedures of the Canadian Grain Commission for automatic mechanical sampling systems used for inward receipt and outward discharge of grain at licensed grain handling facilities. It includes the requirements for the installation, examination, testing, approval, and ongoing monitoring and oversight of these systems. It also includes information on Canadian Grain Commission-approved methods of sampling for the Accredited Container Sampling Program (ACSP) and the Certified Container Sampling Program (CCSP). A section on manual sampling is also included, which may be used **at the discretion of the Canadian Grain Commission** when a lot of grain cannot be sampled by mechanical means.

A licensed grain handling facility mandated to use or requesting Canadian Grain Commission inspection services must install Canadian Grain Commission-approved automatic sampling equipment to sample grain in the facility.

This Sampling Handbook supersedes any previous Canadian Grain Commission sampling directives and is intended for use by Canadian Grain Commission personnel, producers, and members of the grain trade. It contains the following chapters:

Chapter 1: General information
Describes the purpose of the document, the authority and responsibilities of interested parties, and relevant definitions as they apply to this Sampling Handbook.

Chapter 2: Automatic sampling systems for licensed grain handling facilities
Describes equipment, verification processes, security, maintenance, and the monitoring and oversight of automatic sampling systems.

Chapter 3: Conditionally-approved automatic sampling systems for specific Canadian Grain Commission programs
Describes the equipment and programs to which these sampling systems may be approved.

Chapter 4: Canadian Grain Commission-approved manual sampling methods
Describes various manual sampling methods used for static and flowing grain.

Chapter 5: Canadian Grain Commission-approved sample dividing equipment
Describes the equipment and procedures used to divide grain samples into smaller representative portions.

Chapter 6: Contact information

1.2 Authority

This Sampling Handbook has been prepared under the authority of the *Canada Grain Act* and the Canada Grain Regulations.

1.3 Responsibilities

The Canadian Grain Commission inspects, approves and oversees the operation of all automatic sampling systems at licensed grain handling facilities used to draw official samples for cargo destined for export. In addition, the Canadian Grain Commission's responsibilities include an oversight role for sampling systems used for receipt of grain at licensed terminal elevators. All systems will be subject to regular monitoring and oversight protocols established by the Canadian Grain Commission. The protocols for automatic sampling systems used to collect these samples will be determined upon the sampling systems' installation location and use within each licensed grain handling facility.

The operator of the licensed grain handling facility that owns, leases, or operates the automatic sampling system is required to:

- Provide a written request for Canadian Grain Commission approval of a sampling system
- Install all equipment subject to Canadian Grain Commission approval as prescribed by the manufacturer
- Cooperate with the Canadian Grain Commission for the examination and testing of sampling systems
- Complete all necessary repairs, maintenance, and environmental considerations specified by the Canadian Grain Commission and the manufacturer
- Provide the Canadian Grain Commission written notification of any ongoing problems that may occur with any approved sampling system
- Keep maintenance logs specific to Canadian Grain Commission-approved sampling systems and make them available for review by Canadian Grain Commission personnel when requested
- Provide the Canadian Grain Commission written notification if alterations to the system are planned, including any physical changes to equipment or facility that may alter the grain flow to, through, or leaving the sampling system
- Provide the Canadian Grain Commission written notification if the sampling system will no longer be used to obtain official samples

All sampling systems used to draw samples representing consignments for receipt and discharge at licensed grain handling facilities must be operated in accordance with the Sampling Systems Handbook and Approval Guide.

1.4 Glossary of terms

This section describes common terms and descriptions used in sampling grain in Canada.

Alteration
Modifications or changes made to the sampling system after the system was last tested by the Canadian Grain Commission. This includes but is not limited to changes to sampler position, parts, speed, wiring, dust collection, etc., as well as changes to the grain handling system that may affect the sampling system, such as an increase in grain flow, change in belt speed, or use of new shipping bins.

Approval
Written approval issued by the Canadian Grain Commission to licensed grain handling facilities granting them permission to operate new automatic sampling systems within their facilities. These sampling systems have been evaluated and found to meet the requirements described in this Sampling Handbook.

Auxiliary controls
Device that duplicates or bypasses the operating controls or interrupts the Canadian Grain Commission-exclusive use of the sampling device.

Commodities
Grain, grain products, or screenings found in a licensed grain handling facility.

Composite sample
A sample which is comprised of the total number of primary samples taken from a lot of grain. It is formed by combining and mixing together all primary samples from one specific lot of grain.

Lockout control
Device used to disconnect the main power supply to all the sampling equipment and bring the entire sampling system to a zero-energy state.

Official sample
A sample taken from a lot of grain by a person authorized by the Canadian Grain Commission to take the sample or by any sampling device authorized by the Canadian Grain Commission.

Operating controls
Controls used by Canadian Grain Commission personnel for the normal operation of the sampling system. These include on/off control panel switches, timers, sampler indicator lights, and pneumatic sample delivery system indicator lights.

Primary sample
A portion of grain taken from a lot of grain during one single sampling action.

Primary sampler
Main sample collector installed at an inward or outward inspection sampling point in a licensed grain handling facility.

Sample divider
The mechanical or gravitational divider used to reduce the size of the sample obtained by the primary sampler.

Sampling intensity
Sampling intensity is the number of primary samples taken to construct a representative composite sample of the lot.

Sampling action
The act of capturing grain from the lot, such as one single entry and withdrawal of the double sleeve trier, one scooping action of grain flowing on a belt, or one single pass of an automatic cross stream sampler.

Suspension
A written confirmation by the Canadian Grain Commission withdrawing approval for the use of a sampler and/or delivery system. A formal suspension may not be required if the sampler and/or delivery system problems are corrected within a specified timeframe, evaluated, and tested, if necessary, by the Canadian Grain Commission.

Chapter 2

Automatic sampling systems for licensed grain handling facilities

2.1 Overview

Automatic sampling systems used to collect samples for inspection purposes at licensed grain handling facilities must meet the requirements defined in this Sampling Handbook.

In general, the Canadian Grain Commission will approve only automatic sampling systems that extract a complete and proportional cross-section of the grain stream (both height and width), proportionally reduce the sample size, and deliver the sample to the inspection area. Samplers of this type are commonly referred to as cross-stream diverter-type samplers. The dividers and the delivery system must conform to manufacturer specifications and must be constructed with the industrial durability required to operate in the environment where the system is located.

The Canadian Grain Commission must retain operational control or have access to the operational control of automatic sampling systems and has the authority to accept or reject the use of those devices. As owners of the sampling systems, grain handling facilities must be aware of their responsibilities to obtain and maintain Canadian Grain Commission approval for their sampling systems.

2.2 Equipment requirements

Canadian Grain Commission approval for any new sampling concepts will be based on the ability of the proposed sampling system to do all of the following:

- Extract a sample from a two-dimensional (height and width) section of the grain stream
- Proportionally reduce the sample size
- Deliver the sample to the inspection area

Arc-path samplers may be approved for official inspection purposes, provided that the cutter opening is at least 1.9 cm (0.75 inches), measured perpendicular to the grain stream, as the cutter enters and exits the grain stream.

Figure 1: Diagram of minimum required cutter opening in an arc-path cross stream sampler

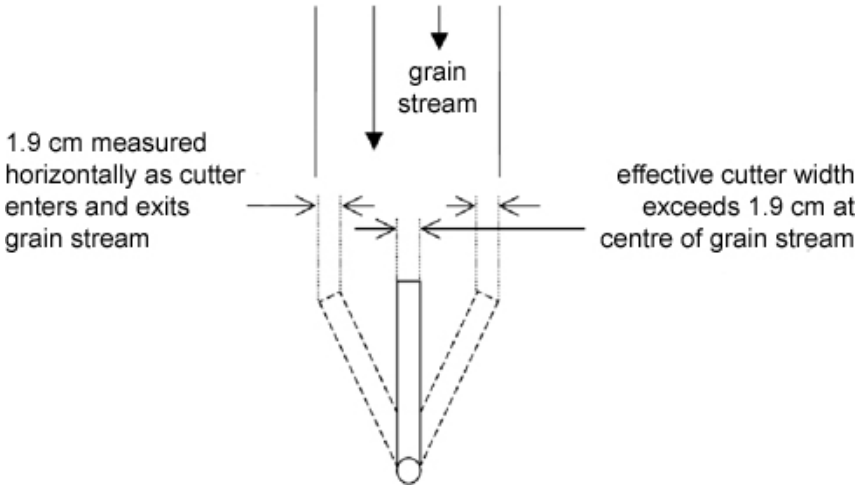

Figure 1 shows the cutter opening measuring at least 1.9 cm (0.75 inches) as it enters the grain stream, when it is at the centre of the grain stream, and as it exits the grain stream.

Figure 2: Cross-stream sampler cutter path diagram with front view of cutter (belt end)

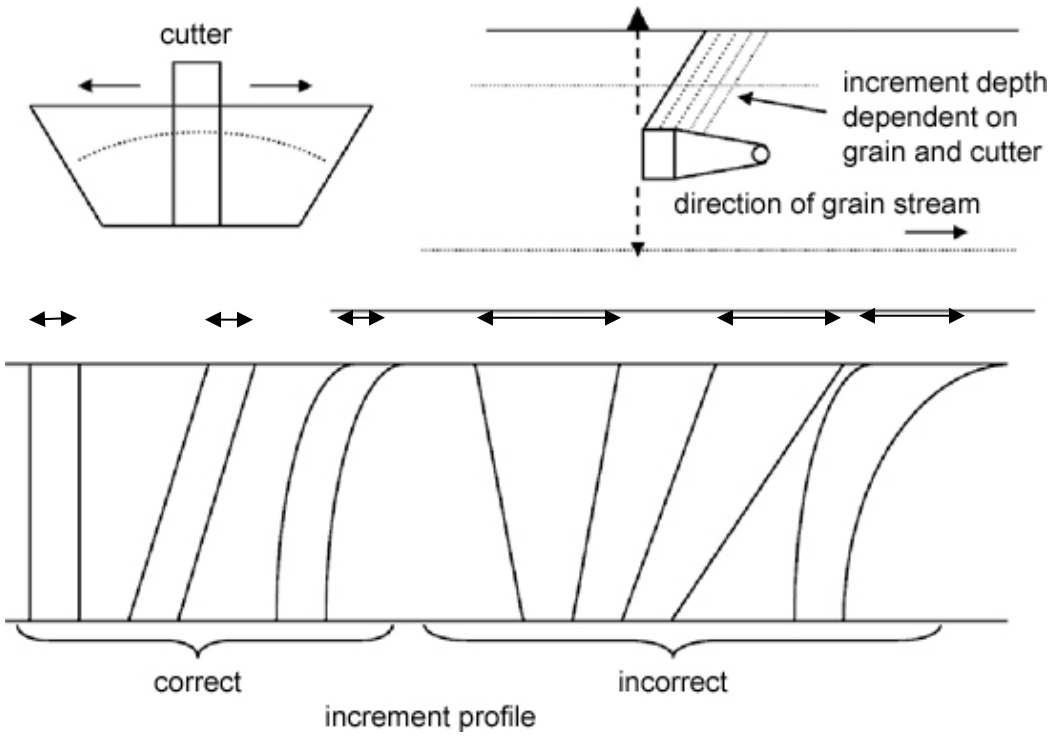

Figure 2 shows the requirements for sampling using a cross-stream sampler. The diagram shows the sampler cutter trajectory and direction, and illustrates both a correct sample increment and an incorrect sample increment. The width of the increment must be the same, regardless of where it is taken in the grain flow.

Arc-path cross-stream samplers

An arc-path cross-stream sampler is defined as a sampler where the cutter rotates from a centre point and traverses the grain stream by following an arced path. These may be either flowing stream samplers or falling stream samplers.

Figure 3: Diagrams of the top-down view and side view of a flowing stream arc-path cross-stream sampler

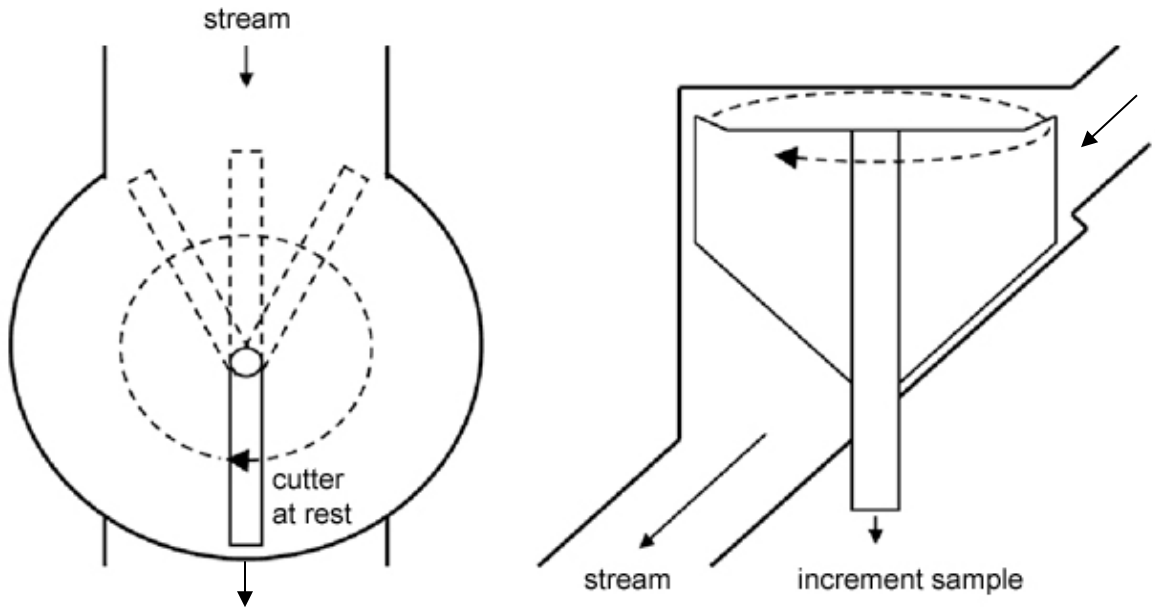

Figure 3 shows a top-down view and a side view of a flowing stream of arc-path cross-stream sampler. The diagram shows the direction of the grain stream, the sampler cutter trajectory, and the direction of the increment sample.

Figure 4: Diagrams of the top-down view and side view of a falling stream arc-path cross-stream sampler

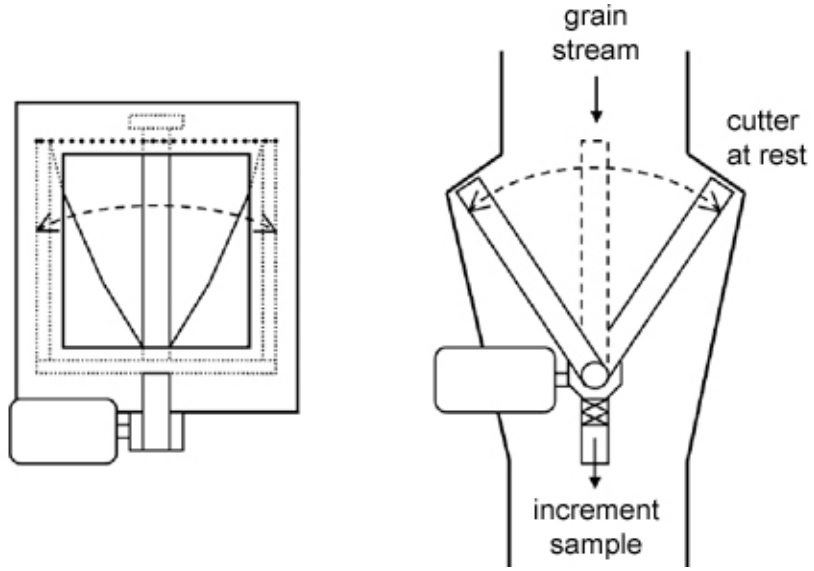

Figure 4 shows a top-down view and a side view of the falling stream type of arc-path cross-stream sampler. The diagram shows the direction of the grain stream, the sampler cutter trajectory, and the direction of the increment sample.

2.2.1 Intended use

- The design, composition, and construction of a sampling system and its associated equipment must suit the environment, the installation location, and the intended use of the sampling system
- The device must be able to withstand normal operation within the facility without loss of reliability or accuracy
- Under normal operation, any moving parts must remain operable, and any adjustments must remain reasonably constant

2.2.2 Marking

- The primary sampler and associated divider or pneumatic components must be permanently marked to show the manufacturer, model, and serial numbers
- The rated maximum throughput capacity must also be marked on the device or be readily available based on the model number

2.2.3 Repeatability

The overall dimension of the sample entry and sample cutter must be adequate for the volume and velocity of the grain being sampled, and must allow:

- All grain presented for sampling to be accepted as the collection opening passes through the grain stream
- The sample cutter to deliver the entire collected sample to the divider for reduction or to the final sample collection site

When collecting samples:

- The rate of grain flow past the sampler should not be less than 25% of the rated maximum capacity of the grain elevation/conveying system
- All sampling systems installed within a licensed grain handling facility must provide a similar quantity of sample when used for the same purpose
- The quantity of sample delivered must be within 10% of any other sampling system when sampling the same type and quantity of grain

2.2.4 Speed of traverse

- Any non-programmable speed setting must be set to maximize the efficiency and effectiveness of the sampling system
- The traverse speed of the sample cutter across the grain stream must be set at 0.47 to 0.51 metre per second (18 to 20 inches per second) and at an even rate of acceleration

2.2.5 Power, air, and hydraulic sources

- Electrical power sources for the operation of a sampler and any associated equipment must be maintained at a constant voltage to ensure the smooth and unaffected operation of the equipment
- Air or hydraulic sources for the operation of a sampler and any associated equipment must be maintained at a constant and uniform pressure to ensure the smooth and unaffected operation of the equipment
- If the operation of any equipment attached to the same air or hydraulic supply affects the operation of the sampling system, a separate air or hydraulic supply must be used

2.2.6 Controls

- During the operation of a sampling system for official inspection, the control of the timer and resets must be under the direction of the Canadian Grain Commission personnel on site or be readily available to them
- If a grain flow indicator is required to verify grain flow rates, it must be made available. Equipment controls must be marked conspicuously and be within viewing range of the Canadian Grain Commission personnel

2.2.7 Enclosure and access

- All sampling components must be maintained within protective enclosures
- The sampling system must have strategically located access points for inspections

- The locations must allow for ready and easy examination of the sampler components, including the sample cutter openings, motion activation equipment, and dust seals

2.2.8 Sample collector openings

The opening of a sampler cutter must be at least 1.9 cm (0.75 inches) wide, measured horizontally to the grain stream. The opening may be reinforced with narrow support braces to provide structural support and eliminate any distortions to the opening.

Figure 5: Diagram of a sampler cutter with reinforced opening

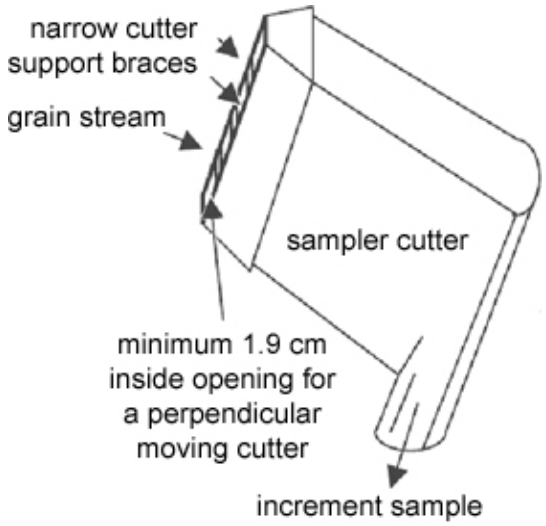

Figure 5 shows a sampler cutter in which the opening is reinforced with narrow support braces. The diagram shows the direction of grain stream and increment sample.

2.2.9 Surplus sample return

- Means must be provided to return surplus sample back to the source grain lot if the sampling system is installed
    - after a weighing system in a shipping installation
    - before a weighing system in a receiving installation
- Where miniature bucket elevators, screw conveyers, or drag conveyers are used to move the surplus sample, they must be adequately sized to prevent a backlog of grain in the system
- The return line for the surplus sample must be to a neutral air pressure location, or automatic means must be in place to prevent any dust or lightweight material from being pressured back into, or vented out of, the sample divider delivery system

2.2.10 Sample delivery lines

Sample delivery lines from the sample divider to the inspection area must follow the most direct route to the inspection area with as few bends as possible. Sample delivery lines must meet the following requirements:

- Delivery lines must not have a turn radius greater 90 degrees and must be laid vertically or horizontally as much as possible
- The delivery conduit must be cut squarely, and the inside edges honed to remove any roughness or burrs
- Conduit for negative or positive pressures must be connected with an airtight coupling
- An electrical path must be maintained over the entire delivery system with suitable grounding points to discharge any static build up
    - Sample delivery lines must be of metal conduit construction with aluminum straight pipe and stainless steel elbows
- The air intake on pneumatic systems must be equipped with a suitable cover to stop unwanted material from being introduced into the official sample
    - The cover must be designed to accommodate security seals and removable to allow for inspection and any necessary testing

2.2.11 Sample delivery system access

A sample delivery system must have access point(s) as close to the primary sampler as possible and after any sample divider. This requirement is to allow for the introduction of Canadian Grain Commission control samples which are used to help evaluate the overall effectiveness of the sample delivery line(s). These access points must accommodate security seals.

2.2.12 Clearing between lots

The entire sampling system, including delivery lines, must be self-clearing to prevent sample contamination from one lot of grain to another while in use.

2.2.13 Location and installation

The location selected for a proposed sampling system must meet the requirements of the Canadian Grain Commission. Any nearby equipment must not adversely affect the operation of the sampler or delay its operation in any manner. Lighting in the area of the sampler must be sufficiently intense (approximately 100 lux). Lighting is best permanently installed to allow visual inspections of the sampling system.

Figure 6: Basic automatic sampling system configuration

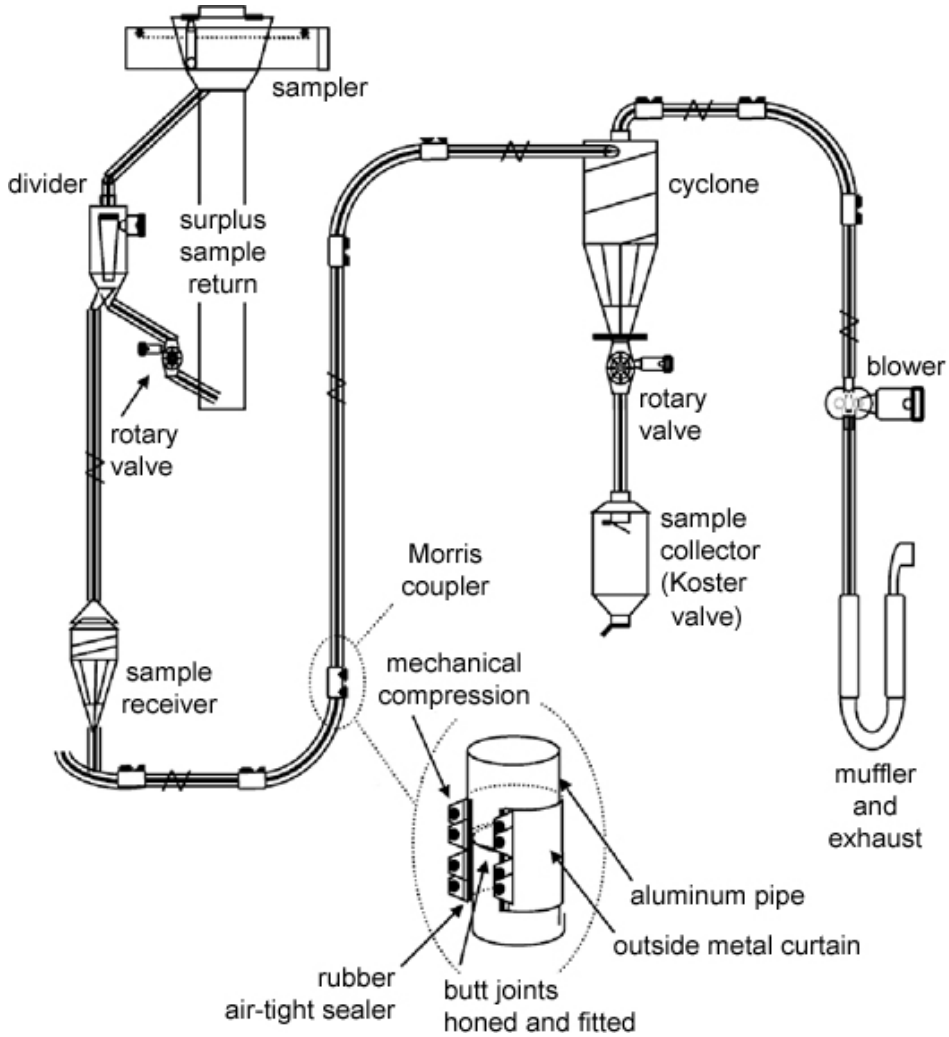

Figure 6 shows the path a sample takes from the sampler through to the sample collector (Koster valve). The diagram includes an expanded schematic of a Morris coupler. Morris couplers are used at various points along the delivery lines.

2.2.14 Segregation of samples

This section describes where to locate samplers and segregate samples in such a way as to ensure that the sample is representative of the grain lot.

- On inward (receiving) sampling systems, the sampler must be located before or immediately after the initial elevation
    - The sample is considered representative only after the entire lot of grain being sampled has passed by the sampler and had the opportunity to be sampled
- On outward (shipping) sampling systems, the sampler must be located after the final elevation and as close as practical to the end of the loading spout
    - The sample is considered representative only after the entire lot of grain being sampled has passed by the sampler and had the opportunity to be sampled

- Samplers located in spouts must not come after a vertical drop of more than 15 metres or be within 0.6 metre of any bends in the spouting
- Before sampling grain to railcars, the sample delivery system must be purged with the same grain and similar quality
    - The purge must be to the furthest return-to-house point in the shipping system
    - The grain delivery system must also be purged in the same way if the elevator operator changes the grain or grade to be sampled
- Outward samplers used for loading railcars must be installed or operate in such a way that the railcar into which the sampled grain is loaded can be identified for each sample
- There must be automated means available for Canadian Grain Commission personnel, such as bin or hopper empty sensors, to identify that the grain being sampled has been delivered to the intended conveyance where the sampler is located
    - above the weighing system
    - below the scale but before shipping or pre-weigh bins

2.2.15 Divider installation

- The divider associated with a sampler must be installed in accordance with the manufacturer's specifications and be reasonably close to the primary sampler
- A gravity or mechanical sample divider must be adequately sized to reduce the quantity of sample from the primary sampler without causing the grain to potentially plug the sample delivery system and therefore impact the integrity of the sample
- Sample divider openings used to select the final sample must be at least 1.9 cm (0.75 inches) measured horizontally to the sampled grain stream
- The divider installation site must be free of hazards, have adequate space for inspecting the device, and be sufficiently clean from dust, spilled grain, and refuse
- Lighting in the area of the divider must be sufficiently intense (approximately 100 lux) and is best installed permanently
- Dividers may be of the swing arm, rotary or gravity type

Figure 7: Diagram of a swing arm sample divider

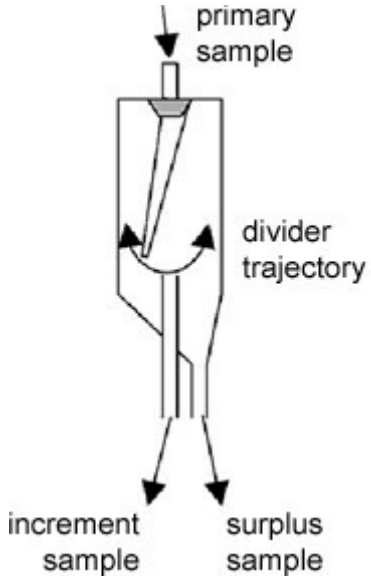

Figure 8: Diagram of a rotary sample divider

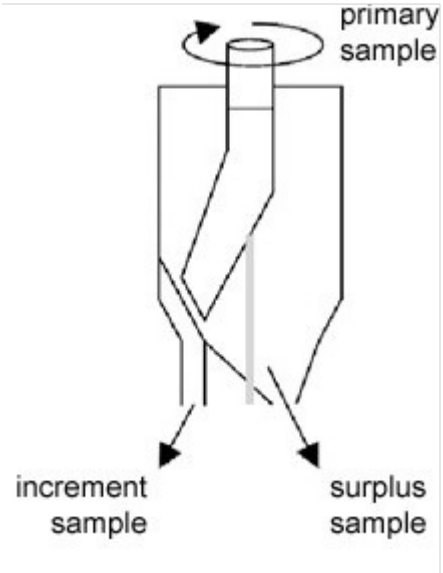

Figure 7 shows a swing arm divider and Figure 8 shows a rotary divider. Both diagrams show the path of the increment sample and the path of the surplus sample.

Figure 9: Diagram of a gravity type sample divider

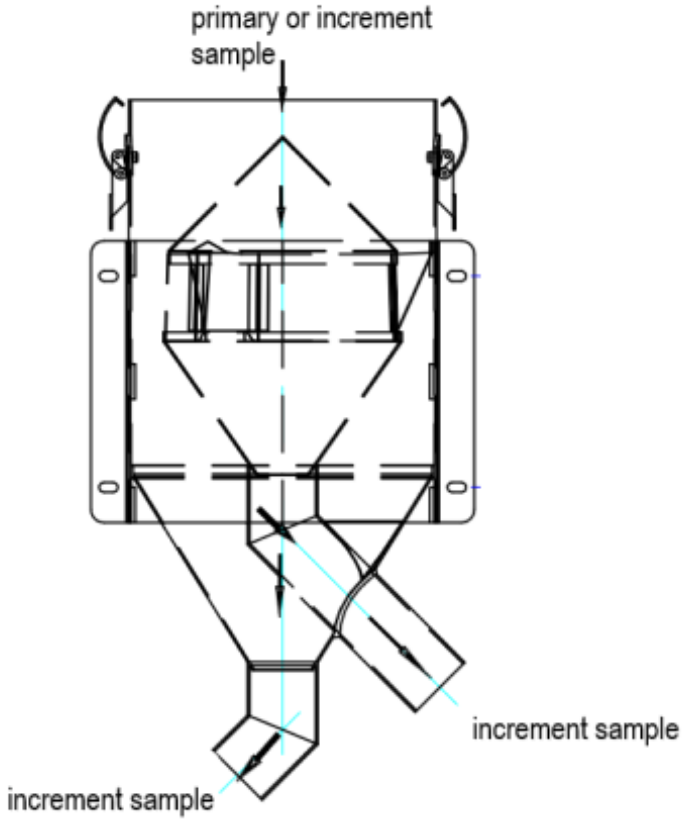

2.2.16 Timer installation and use

Sampler timers:

- May be either analog or digital
- Must have a maximum 1-second dial or timer interval setting
- Must be accurate to within ±1 second of the cycle time

At licensed grain handling facilities where the timers reside in the programmable logic controller (PLC), access to the programming must be made available on request. The facility must bring any adjustment to the timing of the sampler to the attention of Canadian Grain Commission personnel prior to making any change.

When loading or unloading railcars or trucks

- The timer of a cross-stream sampler must be set to an interval **not greater than 20 seconds**
- The divider reduction rate and the sampler timer interval must be set to collect a sample quantity representing between 0.0025% and 0.0075% of the lot being sampled

    - For example, on a 90-tonne railcar, between 2.25 to 6.75 kg of sample must be collected

When loading or unloading vessels or barges

- The timer of a cross-stream sampler must be set to an interval **not greater than 45 seconds**
- The divider reduction rate and the sampler timer interval must be set to collect a sample quantity representing between 0.0005% and 0.001% of the lot being sampled
    - For example, on a 2000-tonne increment, between 10 to 20 kg of sample must be collected

When loading railcars where the sampler is below the weighing system
The sampler may be interlocked with a scale draft counter if all the following requirements are met:

- Where the draft of the bulk weighing system is less than 8 tonnes, the sampler may be timed to traverse at approximately the middle of the draft discharge or it may traverse at a random interval during the discharge
- The random interval must not be controlled by an operator and must ensure that the sampler traverses during the period when grain is flowing
- It is also acceptable to have the sampler traverse the grain stream based on the time during which grain is actually flowing past the sampler in a spout
    - To accomplish this, a flow detector is installed immediately before or after the sampler and is integrated with the sampler control
    - The flow sensor activates the sample interval timer when product is flowing in the spout and stops the time when there is no flow
    - When flow is detected again, the interval timer resumes from the point where it stopped
    - For example, if the sample interval is 20 seconds and flow stops when the elapsed time since the sampler last traversed is 16 seconds, the sampler traverses when flow has resumed for 4 seconds

2.2.17 Blending limitations

Any blending of grain must be completed in an even and uniform manner before the grain reaches the sampler.

2.2.18 Integrity of grain lots

- Means must be provided to prevent the addition of grain or other commodities to the grain stream, or the removal of any portion of the sampled grain, after it has passed the sampler
- Feeder spouts or diversion spouts after the sampler must be sealable with Canadian Grain Commission security seals, keyed locks, or positive electronic means under the direction of Canadian Grain Commission personnel

- If, during official Canadian Grain Commission inspections, security means are found to be missing or to have been tampered with, the shipment or lot will be rendered non-representative
- The sampling, weighing, and delivery systems must not be manipulated, operated, or circumvented in any manner intended to purposefully influence, degrade, or bias the sample, any part of the sample, or the lot of grain the sample represents

2.3 Verification and approval process

Prior to being approved for use, any new or modified sampling unit must be examined by Canadian Grain Commission personnel.

Before requesting Canadian Grain Commission approval, the licensed grain handling facility should

- prove likeness and quality preservation through the system by comparing belt samples or spout samples (obtained using standard manual sampling methods or an acceptable alternative) with the mechanically obtained sample from the same lot
- evaluate the delivery lines to ensure they are operating in accordance with the conditions outlined in this Sampling Handbook

Before granting approval, Canadian Grain Commission personnel will examine the sampling system to confirm all the requirements outlined in this Sampling Handbook are satisfied. This evaluation is comprised of a series of 3 steps, all of which must be completed before approval is granted. Canadian Grain Commission personnel will coordinate scheduling this process with the licensed grain handling facility management.

Licensed grain handling facility staff will be required to give access and assist in any evaluations as required by Canadian Grain Commission personnel. Results of any testing conducted will be made available to facility management upon request.

Step 1: Sampler Condition and Efficiency Check

A sampler condition and efficiency check involves examining all the sampling equipment to ensure the installation meets the requirements as per manufacturers' specifications and those identified in this Sampling Handbook.

Step 2: Delivery System Evaluation

A delivery system evaluation requires that 3 samples of known quality and quantity per grain group be introduced into the delivery system as close to the primary sampler as possible. These samples are collected and analyzed for quantity and quality. A total of 6 samples are used to evaluate the effective operation of the delivery system. The results of this test are analyzed and used to identify any potential areas of concern in the operation of the delivery system. It is at the discretion of the Canadian Grain Commission to accept or reject the results of this process.

Step 3: Operational Verification

An operational verification consists of a visual and operational confirmation that the entire sampling system operates as expected and delivers a sample conforming to the requirements of this Sampling Handbook over a period determined by Canadian Grain Commission personnel. The operational verification may also include a comparison to manually obtained samples or to samples obtained by another automatic sampler to ensure the sample resembles the properties of the grain being sampled.

Sampling systems must meet all the examination requirements described above in order to be approved for use by the Canadian Grain Commission.

Based on the results of these evaluations, the Canadian Grain Commission will issue a letter of notification to the licensed grain handling facility indicating if the sampling system is approved. Results of any testing conducted by Canadian Grain Commission personnel will be made available to grain handling facility management upon request.

2.4 Sampling system security

Means must be provided to apply Canadian Grain Commission security seals to any access points as determined by Canadian Grain Commission personnel. Examples include on inspection doors located on the sampler and divider or on certain sample delivery line access points to ensure the integrity of the system is maintained and verifiable as deemed necessary. When any security seals are breached by licensed grain handling facility staff for maintenance or any other cause, Canadian Grain Commission personnel must be notified immediately so that security seals may be reapplied and documented as required. Broken security seals may result in a temporary suspension of the sampling system until the details of the security seal breach can be investigated.

2.5 Maintenance

The licensed grain handling facility is responsible for installing and maintaining all Canadian Grain Commission-approved sampling systems as prescribed by the manufacturer and in accordance with this Sampling Handbook. Facility management must complete all necessary repairs, maintenance, and environmental considerations specified by Canadian Grain Commission personnel and the system manufacturer. When alterations to the system are planned, or unexpectedly arise, facility staff must notify Canadian Grain Commission personnel and provide written details before making any change to the system. Facility staff must keep a record of maintenance (log) for each Canadian Grain Commission-approved sampling system,

to be made available for review on request. Any ongoing sampling system problems experienced by the grain handling facility operators must be reported to Canadian Grain Commission personnel. Any Canadian Grain Commission security seals that are breached during maintenance must be reported immediately. When any alterations are made to any sampling system or components thereof, the Canadian Grain Commission may require the system be re-evaluated to ensure its continued compliance to this Sampling Handbook. At the discretion of the Canadian Grain Commission, this may require a detailed evaluation of the entire system.

2.6 Monitoring and oversight protocols

The Canadian Grain Commission approves and oversees the operation of all automatic sampling systems used to draw samples on outward discharge at licensed terminal grain handling facilities. The Canadian Grain Commission's responsibilities include an oversight role for inward sampler and delivery systems used for receipt of grain at licensed terminal elevators. These systems are subject to regular monitoring and oversight protocols established by the Canadian Grain Commission. The protocols for automatic sampling systems used to collect these samples will be determined based upon the sampling systems' installation location and use within each licensed grain handling facility.

Inward receipt into licensed terminal elevators

3-month inspection
On a 3-month cycle, Canadian Grain Commission personnel will conduct an in-depth visual monitoring and oversight inspection that includes, but is not limited to, the following:

- Visually checking the entire system for any leaks, diversions or security seal breaches
- Verifying equipment
- Determining the general condition and operation of the equipment to ensure that the sampling system is being operated and maintained as described in this Sampling Handbook
- Reviewing facility sampling system maintenance records if/when required

12-month inspection
On a 12-month cycle, Canadian Grain Commission personnel will conduct an in-depth inspection on all sampling components (internally and externally) that includes, but is not limited to, the following:

- Visually checking the entire system as per 3-month cycle
- Visually checking for internal and external wear on the sampling components
- Verifying equipment
- Determining the general condition and operation of equipment to ensure that the sampling system is being operated and maintained as described in this Sampling Handbook
- Reviewing facility sampling system maintenance records if/when required

24-month inspection
On a 24-month cycle, Canadian Grain Commission personnel will conduct a complete Verification and Approval Process (refer to section 2.3) of the entire sampling system to ensure it continues to conform to the requirements of this Sampling Handbook.

Note: At the discretion of the Canadian Grain Commission, any approved sampling system that is suspected to be operating with questionable accuracy may be subject to an in-depth review earlier than the 24-month anniversary review.

Seasonal inspection
Sampling systems that the Canadian Grain Commission considers in use "seasonally" will be evaluated before the beginning of each season. The requirements for Canadian Grain Commission-approved automatic sampling systems that are only used "occasionally" will be determined on a case-by-case basis.

Any system found to be non-compliant with this Sampling Handbook will result in written notification to the licensed terminal elevator operator indicating that remedial action is required. This notice will include details of non-compliance issues and an expected timeframe during which facility management must address the non-compliance(s).

Outward discharge from a licensed terminal elevator

Per-shift inspection
Each shift (when outward discharge to a vessel is occurring), Canadian Grain Commission personnel onsite will inspect and monitor the sampling system to ensure it is operating as expected.

3-month inspection
On a 3-month cycle, Canadian Grain Commission personnel will conduct an in-depth visual monitoring and oversight inspection that includes, but is not limited to, the following:

- Visually checking the entire system for any leaks, diversions or security seal breaches
- Verifying equipment
- Determining general condition and operation of equipment to ensure that the sampling system is being operated and maintained as described in this Sampling Handbook
- Reviewing facility sampling system maintenance records if/when required

12-month inspection
On a 12-month cycle, Canadian Grain Commission personnel will conduct an in-depth inspection on all sampling components (internally and externally) that includes, but is not limited to, the following:

- Visually checking the entire system as per 3-month cycle
- Visually check for internal and external wear on the sampling components
- Verifying equipment will be verified
- Determining the general condition and operation of equipment to ensure that the sampling system is being operated and maintained as described in this Sampling Handbook
- Reviewing facility sampling system maintenance records if/when required

24-month inspection
On a 24-month cycle, the Canadian Grain Commission will conduct a complete Verification and Approval Process (see section 2.3) of the entire sampling system to ensure it continues to conform to the requirements of this Sampling Handbook.

Note: At the discretion of the Canadian Grain Commission, any approved sampling system that is suspected to be operating with questionable accuracy may be subject to an in-depth review prior to the 24-month anniversary period.

Seasonal inspection
Sampling Systems that the Canadian Grain Commission considers in use “seasonally” will be evaluated before the beginning of each season. The requirements for Canadian Grain Commission-approved automatic sampling systems that are only used “occasionally” will be determined on a case-by-case basis.

Any system found to be non-compliant with this Sampling Handbook will result in written notification to the licensed terminal elevator operator indicating that remedial action is required. This notice will include an expected timeframe during which facility management must address the non-compliance(s).

Chapter 3

Conditionally approved automatic sampling systems for specific Canadian Grain Commission programs

3.1 Overview

The Canadian Grain Commission considers strip auger samplers and point type samplers non-conforming because they do not extract a complete and proportional cross-section (both height and width) of the grain stream.

However, these types of samplers may be considered if used by licensed grain handling facilities operating under specific Canadian Grain Commission programs.

Accredited Container Sampler Program (ACSP)
This program allows grain companies to obtain official Canadian Grain Commission inspection and certification for their container shipments based on a sample taken by a third party accredited by the Canadian Grain Commission. Any automatic sampling system used by these third parties must conform to the requirements of a conditionally approved automatic sampler and be approved by the Canadian Grain Commission.

Visit grainscanada.gc.ca for more information about the Accredited Container Sampler Program.

Certified Container Sampling Program (CCSP)
This program allows grain and transloading companies to take samples at their facilities and submit them to the Canadian Grain Commission for inspection and certification. The Certified Submitted Sample Certificate issued through this program states the following:

> "The lot or consignment identified above has been sampled by a shipper or loading facility officially recognized as operating under a Canadian Grain Commission certified sampling program."

Visit grainscanada.gc.ca for more information about the Certified Container Sampling Program.

3.2 Equipment

At the Canadian Grain Commission's discretion, a conditionally approved sampling system may be used to sample grain for either the Accredited Container Sampler Program or Certified Container Sampling Program provided that the following requirements are met:

- The sampled grain, either bulk or bagged, is destined for shipment in a container
- The grain being sampled has been cleaned and does not contain dockage material
- The sampling system has been reviewed and authorized by the Canadian Grain Commission
- The sampling system is used and maintained in the manner deemed suitable by the Canadian Grain Commission

The following criteria will be used by the Canadian Grain Commission in reviewing and authorizing sampling systems for these programs:

- The sampling tube may be either installed permanently in the grain stream or the tube may extend into the grain stream intermittently
- Where the sampling tube extends into the grain, the tube must extend to at least 75% of diameter of the grain stream
- The combined length of the sampler tube opening on the sampling tube must be at least 55% of the probe length
- One sampling tube opening must be within 19 mm (0.75 inches) of the spout wall from which the product is flowing
- The dimensions of the sampling tube openings must be at least 19 mm (0.75 inches) wide and 88.9 mm (3.5 inches) long and be in a uniform pattern along the entire length of the tube
- Automatic samplers must have an adjustable timer. Sampler timers may be either analog or digital, and must have a maximum 1-second dial or timer interval setting
- Sampling intervals will be determined on a case-by-case basis, to ensure adequate sampling intensities and frequencies are being achieved

Note: Any deviations from these criteria will be considered on a case-by-case basis.

Figures 10 and 11 are examples of automatic samplers that may be considered for use under these programs.

Figure 10: Diagrams of possible strip auger sampler installations collecting an increment sample at a specific point

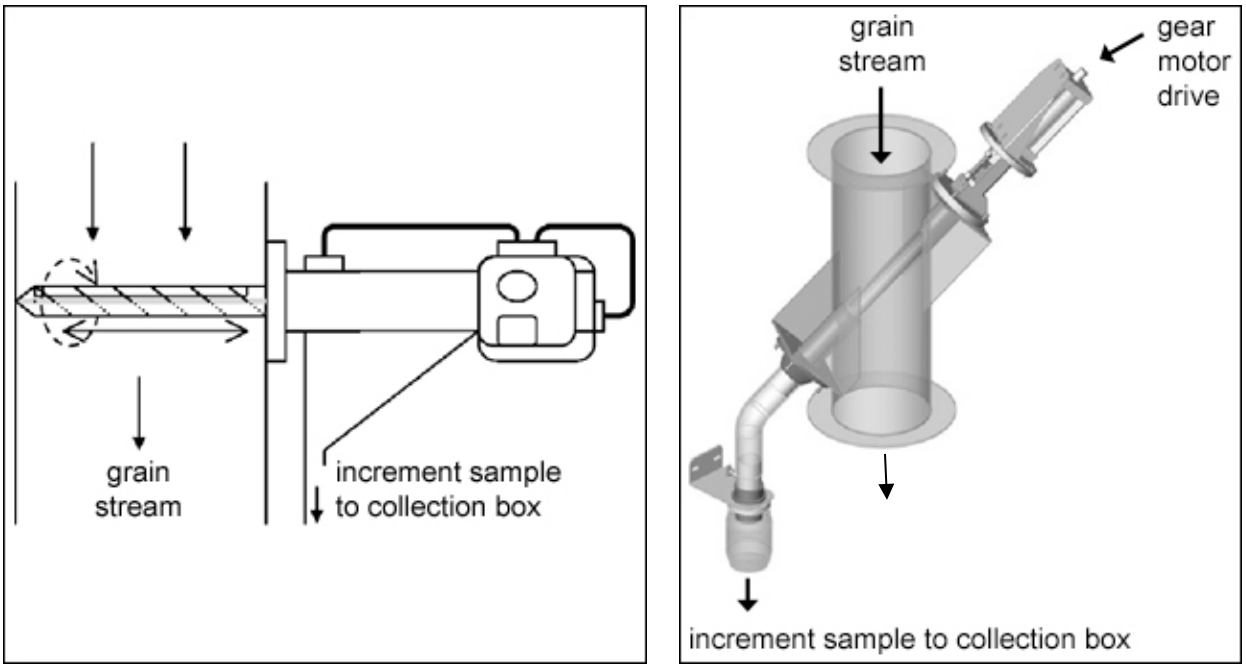

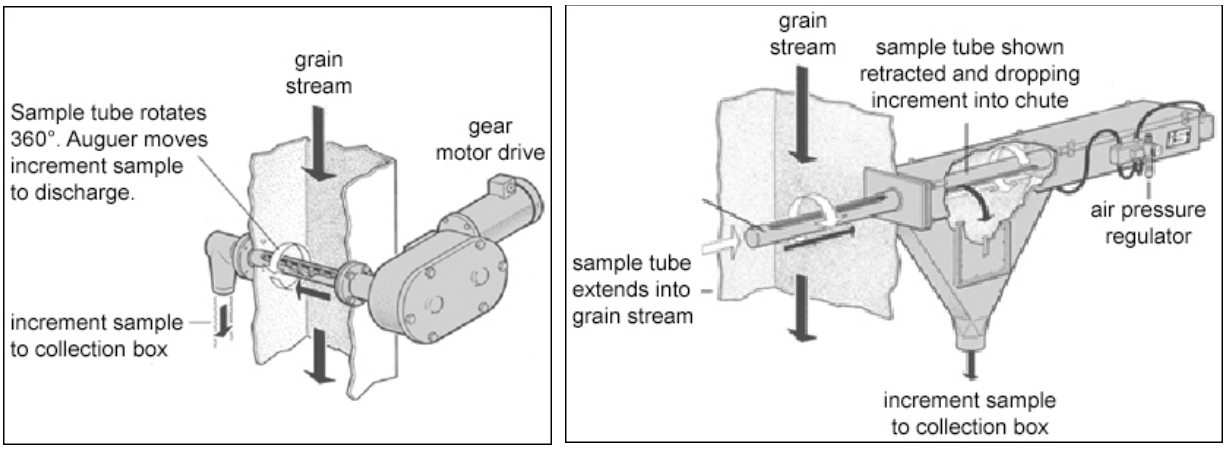

Figure 11: Diagram of a point type sampler

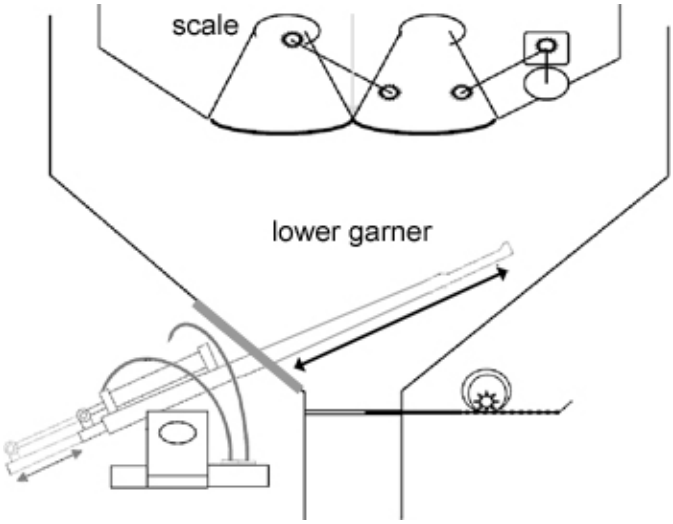

Figure 11 shows a point type sampler with the sampling tube extending to at least 75% of the width of the grain stream.

Chapter 4

Manual sampling

4.1 Manual stream sampling

Samples taken from the grain stream must be drawn at regularly timed intervals from the beginning to the end of the transfer. Equipment that can be used for manual sampling under these conditions is described as follows:

Hand scoop
The hand scoop is a sampling device consisting of a rigid material scoop attached to a 50- to 100-centimetre handle that is stiff and durable. The sample collector must have a capacity of at least 50 grams and not more than 200 grams.

Figure 12: Diagram of 3 different types of hand scoops

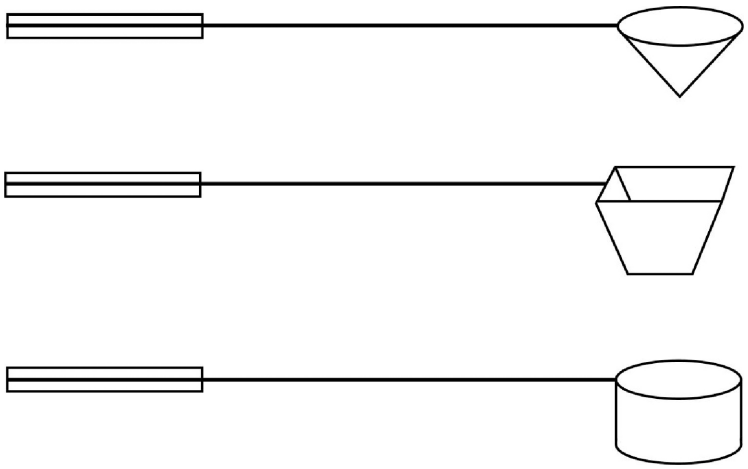

When manual stream sampling with a hand scoop off the top of a belt,

1. insert the sampling tool into the stream at an alternate point across the stream (left, middle, right) for each sampling action
2. place the scoop into the flow of product upstream
3. matching the belt speed, move the scoop downstream while turning the scoop to fill with grain

Moving the scoop with the flow allows sampling of the appropriate location on the belt without splashing product or overflowing the scoop.

For instructions on manual stream sampling free-flowing product, refer to the Guide to Taking a Representative Sample.

4.1.1 Determining sampling frequency when stream sampling

Caution: Sampling must be done in an area where the entire grain stream is accessible. Follow all safety precautions to when attempting to sample from a grain stream or near a moving conveyor.

Stream sampling bulk grain into containers

The sampling frequency is determined by the how much time is needed to load the grain and the lot size. The Canadian Grain Commission requires a minimum of 5 primary samples per 20-tonne container, collected systematically at evenly spaced timed intervals (at least 1 primary sample taken every 4 metric tonnes). If a larger composite sample is required, reduce the interval between primary sample collections throughout the entire loading process.

Example sampling frequency

The grain lot is 2 containers of 20 tonnes each and will be loaded in approximately 30 minutes.

- 40 tonnes total weight ÷ 4 (1 sample per 4 tonnes) = 10 samples minimum required
- 30 minutes to load the lot ÷ 10 required samples = 3 minutes

A sample will be taken at timed intervals every 3 minutes throughout the entire loading of the 40-tonne lot.

The hand scoop that is being used in this example has a capacity of 200 grams.

- 10 scoop samples x 200 grams per scoop = 2000-gram sample collected

Note: If a larger composite sample is required, shorten the interval between samples so more samples are taken. Do not increase the size of the scoop.

Procedure for stream sampling large bulk lots

The sampling frequency must be at least one primary sample collection per minute taken systematically throughout the entire transfer.

1. Insert the hand scoop, with the scoop upside down, into the grain flow upstream
2. While moving it downstream, turn the scoop to fill with grain (moving the scoop with the grain flow allows sampling of the appropriate location in the grain stream without splashing grain or overflowing the scoop)
    - Take samples at alternating points across the stream (left, middle, right)
3. Examine the primary samples for uniformity while sampling
4. Combine the primary samples in a sample container to form a composite sample
5. Reduce the composite sample to the appropriate size using a Boerner-type divider (refer to Chapter 5)

Video: Taking a representative sample

4.2 Manual sampling of static (non-flowing) lots

Grain may be sampled when stored in bags or totes. Grain sacks weighing 100 kg or less are considered bags. Grain sacks weighing 100 kg or more are considered totes. Both bags and totes are sampled using a double sleeved trier or Nobbe trier.

Figure 13: Photos of grain storage totes (left) and stacked grain storage bags (right)

Double sleeve trier

The double sleeve trier consists of a hollow tube with a solid pointed end and a close-fitting inner tube such that the product cannot slip between the two sleeves. The inner tube may be with or without partitions (fixed or removable plugs) between the slots.

Partitioned double sleeve triers may be used horizontally or vertically. Double sleeved triers without partitions may only be used vertically when sampling grain totes weighing greater than 100 kg. Partitions must be in place when vertical sampling bagged grain weighing 100 kg or less.

Figure 14: Photo of 3 different sizes of double sleeve triers

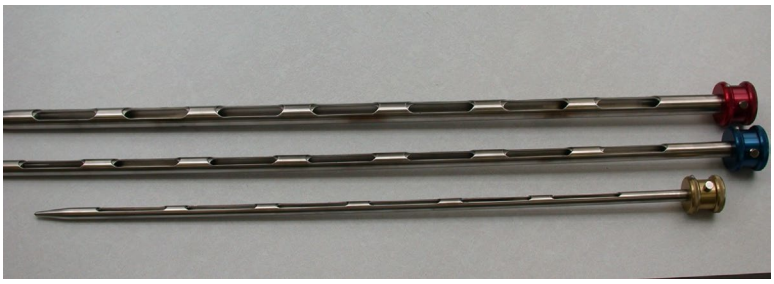

Multiple openings (slots or holes) are cut into both the inner and outer tubes so that turning the inner tube aligns the openings of the inner and outer tubes. There is a greater risk of contamination with a double sleeve trier. Be careful to ensure that all the openings in both the inner and outer tubes are clean and that no small seeds or particles are lodged between the two tubes. Close the openings slowly, until resistance is felt, to reduce the risk of damaging product trapped between the edges of the slots.

The contents of the entire tube represent one primary sample.

- When sampling horizontally, the trier must be long enough to reach the opposite end of the bag
- When sampling bags (weighing 100 kg or less) vertically using a double sleeve trier,
    - a partitioned trier must be used
    - the trier must be long enough to reach the bottom of the container or bag
- When vertically sampling totes (weighing greater than 100 kg) using a double sleeve trier,
    - the trier may be used with or without partitions
    - the trier must be long enough to reach the bottom of the bag or tote

Nobbe trier

The Nobbe trier is a pointed tube with an oval opening near the pointed end. It is relatively compact, making it easy to transport. The risk of contamination is low as the trier is easy to keep clean. A Nobbe trier is suitable for sampling free-flowing product in bags, but only where the trier can reach to the centre of the bag. It may only be used horizontally, and its use is limited to penetrable containers.

Figure 15: Photo of 3 different sizes of Nobbe triers

Note: Facilities bagging grain after cleaning and processing may sample with a hand scoop off the top of the bag (100 kg or less) once filled and before closing, provided the following conditions are met:

- The same sampling tool is used to sample the entire lot
- The sampling tool takes a sample of sufficient size (between 50 to 200 grams) to ensure that the composite is a minimum of 1000 grams
- The sampling of the lot is done at evenly spaced structured intervals at the intensity determined by the table in section 4.2.6

4.2.1 Approved triers by crop type for grain

The Canadian Grain Commission-approved methods of manual sampling a static lot use a double sleeve trier or Nobbe trier. The sampling device used should not select the product

sampled by size or damage the product being sampled. The appropriate trier must be selected by crop type as described in the following chart.

Grain	Trier size
Barley	Large (20 mm or greater)
Beans	Large (20 mm or greater)
Buckwheat	Large (20 mm or greater)
Canary seed	Medium (15mm to 19mm)
Canola	Small (8 to 14 mm)
Chickpeas	Large (20 mm or greater)
Corn	Large (20 mm or greater)
Faba beans	Large (20 mm or greater)
Flaxseed	Medium (15 to 19 mm)
Lentils	Medium (15 to 19 mm)
Mixed grain	Large (20 mm or greater)
Mustard	Small (8 to 14 mm)
Oats	Large (20 mm or greater)
Peas	Large (20 mm or greater)
Rapeseed	Small (8 to 14 mm)
Rye	Large (20 mm or greater)
Safflower	Large (20 mm or greater)
Soybeans	Large (20 mm or greater)
Soybeans (natto type)	Medium (15 to 19 mm)
Sunflower	Large (20 mm or greater)
Triticale	Large (20 mm or greater)
Wheat, Amber Durum	Large (20 mm or greater)
Wheat	Medium (15 to 19 mm)

4.2.2 Requirements for sampling sacked grain

Caution: Follow all safety precautions while sampling stacked grain sacks.

- Sacked grain refers to grain in any type of bag or tote
- The facility/requestor must provide personnel to move sacks as necessary
- All sacks in the lot must be accessible
- All sacks in the lot must be of the same product, weight value and identification
- All sacks must be tagged or stencilled with lot number/identification

4.2.3 Procedure for sampling horizontally with a double sleeve trier

1. Carefully insert the closed trier diagonally on the horizontal plane into the container until it reaches the opposite corner of the container
    - The outer tube opening must be facing upward
    - Be careful not to push the trier through the opposite corner of the container
2. Open the trier until the inner and outer openings are aligned, then agitate it slightly to allow the openings to fill
3. Close the trier gently to the point of resistance and then withdraw it from the container
4. Place each primary sample into a suitable clean container(s) (pan/pail)
5. Check for uniformity with the primary samples already drawn before adding each new sample to the composite sample
6. If necessary, reduce the composite sample to the appropriate size using a Boerner-type divider

Video: Horizontal sampling with a double sleeve trier

4.2.4 Procedure for sampling vertically with a double sleeve trier

1. Insert the closed trier at an angle through the top of the container to the bottom
2. Turn the inner sleeve until the inner and outer openings align and agitate the trier slightly to allow the openings to fill
3. Gently close the trier and withdraw it from the container
4. Collect the sample either
    - on a long, clean piece of paper or into a clean container the same length as the trier when sampling from bags (which must be less than 100 kg) using partitions
    - in a clean container when sampling from totes (which may be 100 kg or more) without using partitions
5. Check for uniformity with the primary samples already drawn before adding each new sample to the composite sample
6. If necessary, reduce the composite sample to the appropriate size using a Boerner-type divider

Video: Vertical sampling with a double sleeve trier

4.2.5 Procedure for sampling with a Nobbe trier

1. With the trier opening facing downward and the trier tilted upwards at an angle of approximately 30 degrees on the horizontal, gently insert the Nobbe trier into the centre of the bag
2. When sampling from the **end** of a bag, insert the trier as close to the bottom edge of the bag as possible (below stitching) until the opening of the trier reaches the centre of the bag

When sampling from the **side** of a bag, insert the trier from the bottom edge of the bag at a 30-degree angle until the opening of the trier reaches the opposite side of the bag

3. Rotate the trier 180 degrees to turn the slot to face upwards
4. Withdraw the trier while gently agitating it to keep an even flow of product into the trier and into the collecting pail/bag
    - Do not agitate the trier until it is being withdrawn from the bag
    - When sampling from the end, withdraw with decreasing speed so the quantity of product obtained from successive locations increases progressively from the centre of the bag
    - When sampling from the side, withdraw with a constant rate of speed
5. Each primary sample must be placed into a suitable clean container/pan/pail/clear bag to allow for checking for uniformity
6. Readjust the bag fibres to close the gap by running the point of the trier across the hole a few times in opposite directions

4.2.6 Determining sampling intensity of grain stored in bags

Samples submitted to the Canadian Grain Commission must be a minimum of 1000 grams. A larger composite sample may be needed if the sample is to be used for multiple purposes. The numbers of primary samples indicated in this chart are minimums. If required, additional primary samples may be taken to construct a larger representative composite sample. All primary samples must be drawn randomly throughout the entire lot.

Sampling intensity up to the maximum lot size of 10 containers or 5000 bags per composite

Number of bags (100 kg or less) in lot	Minimum number of primary samples to be taken
1 to 20	All bags must be sampled
21 to 1000	6% of all bags in the lot, but not less than 20 samples randomly selected throughout
More than 1000	3% of all bags in the lot, but not less than 60 samples randomly selected throughout

4.2.7 Sampling intensities of grain stored in totes

Totes are grain sacks generally weighing 100 kg or more. All totes must be sampled with a **minimum of 2 primary samples drawn per tote** whether stream sampling (see stream sampling procedure defined above) while the tote is being filled or sampled after the tote is full.

Number of totes in lot	Totes
1 to 20	All totes must be sampled Minimum 2 primary samples per tote
21 to 1000	
More than 1000	

- All totes in the lot must be accessible and must be sampled
- Insert the closed trier into the tote to the maximum depth (bottom of the tote)
- Open the trier and agitate slightly to fill the inner tube
- Close the trier slowly to the point where resistance is felt in order to minimize any damage to the sampled product
- Extract the trier and release the sample onto a cloth, trough or into a sample container and examine it for uniformity
- Based on the quality and quantity of sample taken by the probe, determine if multiple primary samples are required
- It is important to note that each tote in the lot must be sampled the same number of times to ensure equal representation within the lot
- A minimum of 2 trier samples must be taken per tote
- If necessary, reduce the composite sample to the appropriate size using the Boerner-type divider
- Primary samples from a lot or sub-lot may be combined into a composite sample representing no more than 300 totes
    - For example, a lot of 900 totes may be represented by 3 composite samples made up of primary samples from all 900 totes

Note: Totes may be sampled as they are being filled using the procedure outlined for manual stream sampling as defined in section 4.1 of this Sampling Handbook. A minimum of two primary samples for each tote must be taken while being filled, at evenly spaced intervals. For example, one primary sample would be taken at the midway point, and one taken at completion.

Chapter 5

Canadian Grain Commission-approved sample dividing equipment

A Boerner-type divider is the only divider approved for use by the Canadian Grain Commission. It is a gravity-operated dividing apparatus that reduces a grain sample to smaller equal portions. The sample is placed in the upper hopper and released by opening the valve in the hopper throat. The sample flows downward and is evenly dispersed over a cone with evenly spaced separations. The sample is then directed into two grain streams that empty into two collecting pans at the bottom.

Figure 16: Diagram of a Boerner-type divider

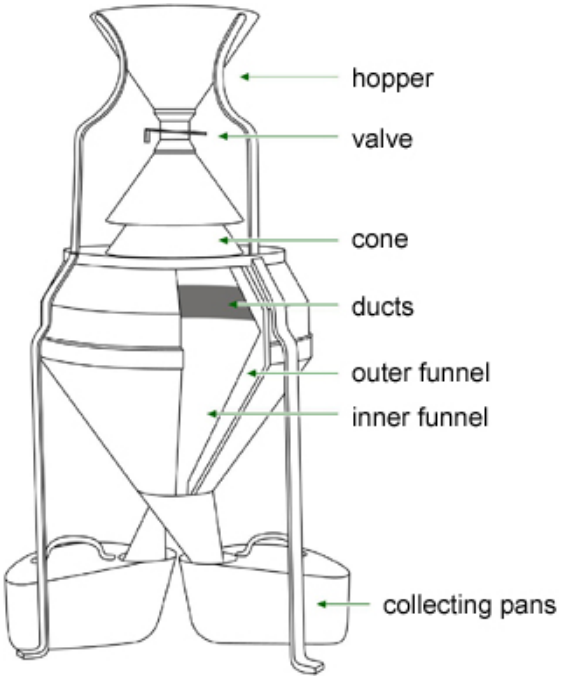

Procedure for dividing a sample using the Boerner-type divider

1. Clean the divider and the collection pans
2. Close the valve at the bottom of the hopper and place a collecting pan under each of the two outlets
3. Pour the grain into the hopper
4. Open the valve quickly
5. The grain will fall by gravity over the cone where it will be evenly distributed through the channels and spaces
6. The grain is divided into two halves, with each part being collected in one of the two collecting pans

- To mix the grain samples, take the collecting pans and repeat steps 2 to 4 at least once for free-flowing grain and at least twice for chaffy grain
- To further reduce the sample, repeat steps 2 to 4 with the sample from one collecting pan to divide it again (always use the collecting pan from the same side)

Chapter 6

Contact information

Please direct any comments, questions or concerns regarding the content of this Sampling Handbook, including any proposed revisions or suggestions, to:

Phone: toll-free 1-800-853-6705 or

TTY: 1-866-317-4289

Email: contact@grainscanada.gc.ca